FILED & JUDGMENT ENTERED
Steven T. Salata

Jan 10 2014

Clerk, U.S. Bankruptcy Court
Western District of North Carolina

George R. Hodges
United States Bankruptcy Judge

UNITED STATES BANKRUPTCY COURT
WESTERN DISTRICT OF NORTH CAROLINA

In Re:	)	Case No. 10-31607
	)	
GARLOCK SEALING TECHNOLOGIES, LLC., et al.,	)	Chapter 11
	)	
	)	Jointly Administered
Debtors.[1]	)	
	)	

ORDER ESTIMATING AGGREGATE LIABILITY

This matter is before the court after a hearing to determine the reasonable and reliable estimate of Garlock Sealing Technologies, LLC's liability for present and future mesothelioma claims. The court has concluded that the amount sufficient to satisfy that obligation is $125 million. In support thereof, the court makes the following findings of fact, conclusions of law and order:

[1] The Debtors in these jointly administered cases are Garlock Sealing Technologies, LLC ("Garlock"), Garrison Litigation Management Group, Ltd., and The Anchor Packing Company.

SUMMARY

Garlock produced and sold asbestos gaskets, sheet gasket material and packing used in pipes and valves that transported hot fluids in maritime, refinery and other industrial applications. Its products spent their working lives bolted between steel flanges or valves and generally wrapped with asbestos thermal insulation produced by other manufacturers. Garlock's products released asbestos only when disturbed, such as by cutting, scraping, wire brushing or grinding – procedures that were done sporadically and then generally only after the removal of the thermal insulation products which caused a "snowstorm" of asbestos dust. It is clear that Garlock's products resulted in a relatively low exposure to asbestos to a limited population and that its legal responsibility for causing mesothelioma is relatively de minimus. The Sixth Circuit has noted in an individual pipefitter's case that the comparison is as a "bucket of water" would be to the "ocean's volume." Moeller v. Garlock Sealing Techs., LLC, 660 F.3d 950, 954-55 (6th Cir. 2011).

Garlock was sued in the tort system by victims of various asbestos-related diseases starting in the early 1980s – generally in Complaints naming 20 to 50 or more defendants. By all accounts Garlock was very successful in settling (and rarely trying) such cases. By the early 2000s the focus of tort

litigation had become mesothelioma wrongful death cases. Such cases presented an extraordinary environment because of the disastrous consequences of a plaintiff's verdict. Thus, even where the likelihood of an adverse verdict was small, the prospect of a huge verdict and the great expense of defending a trial drove Garlock to settle cases regardless of its actual liability.

Beginning in early 2000s, the remaining large thermal insulation defendants filed bankruptcy cases and were no longer participants in the tort system. As the focus of plaintiffs' attention turned more to Garlock as a remaining solvent defendant, evidence of plaintiffs' exposure to other asbestos products often disappeared. Certain plaintiffs' law firms used this control over the evidence to drive up the settlements demanded of Garlock. And, Garlock suffered a few large jury verdicts when such evidence was not available. Garlock continued settling cases with relative success, but at higher amounts, until its insurance was exhausted and it filed this bankruptcy case in June 2010. Involved in the present matter are over 4000 mesothelioma claimants who had sued Garlock prior to its bankruptcy filing and also an unknown number of victims who will develop mesothelioma in the future.

The purpose of this Order is to determine Garlock's responsibility for causing mesothelioma and the aggregate amount

of money that is required to satisfy its liability to present claimants and future victims. The estimates of Garlock's aggregate liability that are based on its historic settlement values are not reliable because those values are infected with the impropriety of some law firms and inflated by the cost of defense. The best evidence of Garlock's aggregate responsibility is the projection of its legal liability that takes into consideration causation, limited exposure and the contribution of exposures to other products. The court has determined that $125 million is sufficient to satisfy Garlock's liability for the legitimate present and future mesothelioma claims against it.

PROCEDURAL BACKGROUND

1. This case commenced in June of 2010 with the filing of a Chapter 11 petition by Garlock Sealing Technologies, LLC and its affiliates, The Anchor Packing Company and Garrison Litigation Management Group, Ltd. An Asbestos Claimants Committee (the "ACC") was appointed to represent existing asbestos disease claimants against the debtors. The members of the ACC are plaintiffs' law firms representing those claimants. Also, a Future Claimants Representative (the "FCR") was appointed to represent future asbestos disease claimants. The debtors are subsidiaries of a non-filing company, Coltec Industries, Inc. ("Coltec"), which is itself a subsidiary of

Enpro Industries, Inc. Although not a debtor, the court has permitted Coltec to appear and participate in all matters. Thus, the parties who have actively participated in the proceedings are Garlock, Coltec, the ACC and the FCR.

2. The parties first embarked on a mission of education because this is a case of first impression in this court. Early on, the parties presented six days of testimony on the nature of asbestos litigation in general and specifically regarding Garlock and its affiliates.

3. Garlock sought to have a determination of claims in an individual allowance proceeding. The court declined to embark on an allowance proceeding at that time. Instead, the court determined to estimate the aggregate amount of Garlock's asbestos liability for the purpose of formulating a plan of reorganization, pursuant to 11 U.S.C. §§ 502(a) & 105(a). See In Re Garlock Sealing Techs., LLC, No. 10-31607 (Bankr. W.D.N.C. Apr. 13, 2012, (Order for Estimation of Mesothelioma Claims) [Dkt. No. 2102].

4. The parties have engaged in wide ranging discovery in preparation for these estimation proceedings. The discovery included not only the normal discovery tools pursuant to the Federal Rules, but also multiple questionnaires directed at the claimants (and their law firms). These were in the nature of social science surveys and sought important information on work

histories and exposure to Garlock's and other manufacturers' products. The parties also engaged expert assistance for the purpose of data compilation, financial projection and overall estimation.

5. In the due course of the base bankruptcy case, Garlock has proposed a Plan of Reorganization that would include a fund of $270 million for resolution of present and future asbestos-related claims. This estimation is necessary to consideration of that Plan or any subsequent modification to it or a competing Plan filed by another party.

6. Fundamental to the present proceedings is this court's April 2012 Order for Estimation of Mesothelioma Claims. That order establishes the goal of reaching a "reasonable and reliable estimate of the amount of Garlock's liability for present and future mesothelioma claims" and sets the course for achieving that.

7. The parties have had two distinct approaches to Estimation that were reflected in their evidence at the estimation hearing. The debtors offered a "legal liability" approach that considers the merits of the claims in aggregate by applying an econometric analysis of the projected number of claimants and their likelihood of recovery. The ACC and FCR offered a "settlement approach" based upon an extrapolation from Garlock's history of resolving mesothelioma claims in the tort

system. The end products of the two approaches differ by about a billion dollars: Garlock's estimate is about $125 million and the ACC/FCR estimates are $1-1.3 billion.

8. The evidence discussed below was presented at a hearing that took place over seventeen trial days and included 29 witnesses and hundreds of exhibits. The court attempts to explain its decision and the reasoning for it by discussing in the following order:

1) The "science" evidence relating to asbestos and asbestos disease;
2) The "social science" evidence relating to practices in asbestos tort litigation;
3) The case law in asbestos estimation cases; and
4) The resulting estimation of Garlock's aggregate liability.

9. Because of the relative overwhelming magnitude of mesothelioma claims in comparison to claims based on other diseases, the parties have agreed and the court has ordered that this proceeding does not include any liability for non-mesothelioma claims or any claims against Anchor. The sole issue here is the liability of Garlock for mesothelioma.

SCIENCE EVIDENCE

10. The parties made an extensive offering of scientific evidence on a number of topics: (a) the nature of asbestos, its different types and their relative toxicity; (b) the medical evidence of the operation of asbestos in the lungs; (c) uses of asbestos in Garlock and other third-parties' products in naval and industrial applications; (d) industrial hygiene and epidemiology evidence of exposure caused by Garlock and third-parties' products; and (e) safety and regulatory pronouncements regarding asbestos exposure. The nature of this evidence was reported to be much like what may have been offered at a trial of a personal injury/wrongful death claim by a mesothelioma victim. There it would be necessary for the jury to resolve issues of causation in a binary fashion — "yes" or "no." But, here in making an aggregate estimation, that is not necessary. Rather, it is sufficient for the court to find that, predominantly, Garlock's products exposed people to only a low-dose of a relatively less potent chrysotile asbestos and almost always in the context where they were exposed to much higher doses of more potent amphibole asbestos. So, across all potential claims, Garlock's liability for mesothelioma should be relatively small.

Nature of Asbestos

11. “Asbestos” is actually a generic or marketing term for a group of naturally occurring minerals used for commercial applications. These include “chrysotile” and “amphiboles.” Amphiboles further include “amosite” and “crocidolite.” Amphiboles have relatively longer, wider and straighter fibers. Chrysotile has a serpentine fiber structure. There are other forms of asbestos that are not used in commercial applications, and these are sometimes a contaminant. Garlock’s products used chrysotile almost exclusively. Amosite was largely used for insulation materials and crocidolite for specialty applications in products produced by others.

12. The relative toxicity or potency to cause disease of the three has been variously expressed. One study stated the ratio as 500:100:50 (crocidolite: amosite: chrysotile). Modification of that ration expressed it as 100:5:1. Another study in 2008 expressed the ratio between amphiboles to chrysotile as 900-2000:0—1. Thus, it is clear under any scenario that chrysotile is far less toxic than other forms of asbestos.

Medical Evidence

13. Inhalation of asbestos can cause a number of diseases of the lung. The focus of this estimation is Garlock's liability for causing mesothelioma, which is a malignancy of the lining around the lungs. It is always fatal, causing death essentially by suffocation within about eighteen months of diagnosis. Fortunately, mesothelioma is very rare. But, for the individual victim it is a horrific death.

14. There is a "background" rate of incidence of mesothelioma in all populations that is not known to be caused by asbestos exposure, but this amounts to a miniscule percentage of cases. The overwhelming incidence of mesothelioma is caused by exposure to asbestos.

15. There is a "dose-response" element to the development of mesothelioma: A higher and more prolonged dose of asbestos increases the chance of developing the disease.

16. There is a long "latency period" between first exposure to asbestos and development of mesothelioma. The median latency period is around 35 years. Higher doses of exposure appear to result in a shorter latency period, but the disease rarely develops in less than ten years.

17. Dr. Thomas Sporn, M.D., is a pathologist who is a professor and attending physician at Duke University where he is the head of Pulmonary and Thoracic Pathology. He described the

differences in the mineralogical structures of the two groups of asbestos minerals and the resulting biologic consequences. The amphibole – amosite, crocidolite and non-commercial tremolite – have a straighter, wider and longer fiber structure. Chrysotile fibers have a serpentine structure and shorter length. Bio-persistence – the amount of time an inhaled particle can persist in the body – is much longer for amphibole asbestos than for chrysotile. Amphiboles resist chemical degradation in the human body and can persist for months to years. Chrysotile is broken down in the body in days to weeks. Dr. Sporn concluded that there is no doubt that amphibole exposure causes mesothelioma. But, chrysotile has a much lower pathogenicity. That is, a person would have to have a much greater exposure to chrysotile to increase their risk of mesothelioma. And exposure to chrysotile from a commercial end product such as gaskets would not be sufficient to cause mesothelioma. Further, Dr. Sporn concluded that there was no scientifically reliable connection between chrysotile exposure and mesothelioma.

18. Dr. David Weill, M.D., is a physician and professor at Stanford University. He is the Director of Stanford's Center for Advanced Lung Disease. He explained the human body's physical and cellular defenses to different types of asbestos fibers. The body's physical defenses in the nose, mouth, throat and lungs are more likely to catch a fiber that has been

encapsulated because it is less aerodynamic than a loose fiber. Even after being inhaled, a fiber may be attacked by macrophage cells that engulf the fiber and release enzymes to dissolve it. The long fibers of amphiboles tend to resist the macrophage cells' efforts to eliminate it. The smaller particles of chrysotile are more easily defeated by the macrophage cells and then eliminated by the lymphatic system. Longer amphibole fibers tend to stick in the lymphatic system and accumulate in the pleural tissue of the lung — the normal site of malignant mesothelioma. Thus, there is a biologic rationale for the differences in toxicity of the asbestos fiber types.

19. Dr. Weill concluded that low dose exposure to chrysotile from gaskets and packing would not contribute to the cause of mesothelioma even over a lifetime of working with those products. There has been no demonstration that pure chrysotile causes asbestos diseases and any likely contamination would only amount to a minute exposure.

20. Dr. Arnold Brody testified about the results of his studies of the effect of chrysotile on rats. He has a Ph.D. in cell biology and is an experimental pathologist and professor at Tulane University. His research results are informative, but are not probative on issues before the court because his focus has not been on causation of disease in humans, but rather on the cellular mechanics of asbestos in animals. His research

does not simulate low-level asbestos exposure in humans. Rather, his studies used extremely high concentrations (1000 f/cc) of pure chrysotile in an aerosol form continuously exposed to rats that had been bred to be pre-disposed to developing disease. Further, none of his studies have actually caused his rats to develop mesothelioma. Moreover, other studies on primates concluded with no pathological findings with low dose exposure to chrysotile. Finally, similar results to his studies are produced by many other substances besides asbestos. Therefore, the court does not find Dr. Brody's testimony persuasive or probative on the issue of the toxicity of sporadic low doses of chrysotile in humans.

Garlock's Products and Applications

21. Garlock produced gaskets and sheet gasket material that contained chrysotile asbestos encapsulated in a polymer substance. On a much smaller scale, it also produced a product line of gaskets containing crocidolite asbestos for specialty applications involving acids. A related company, Anchor Packing, produced packing for valves that contained chrysotile. The last two products are not significant overall sources of personal injury claims, so the evidence primarily focused on Garlock's chrysotile gasket products. Garlock's name was printed on its gaskets, which made it well known in its

industry, and may have contributed to its recognition by claimants.

22. Asbestos gaskets were used in Navy, other marine, refinery and other industrial applications – anywhere that hot liquid was moved in pipes. A gasket is necessary where two sections of metal piping are bolted together or where a section of pipe is bolted to a valve. These were generally large pipes and valves and often ran overhead in cramped spaces. Pipes and valves are joined at flanges that are bolted together. A gasket fits between the flanges to prevent leakage. It may remain there for years. Asbestos was used in gaskets for hot applications because of its insulative and cohesive properties.

23. Virtually all of the pipes, flanges and valves where Garlock's gaskets were used were wrapped in a thick covering of thermal insulation produced by other manufacturers. This thermal insulation contained amosite asbestos and in some applications loose amosite was used to fill voids in the asbestos wrapping.

24. To the uninitiated, the term "insulation" may conjure up images of "R" values, pink panthers and itchy material between attic joists. But, that is not the "thermal insulation" that surrounded the pipes and valves where Garlock's gaskets were used.

25. A typical pipe joint covered in thermal insulation would appear something like this diagram:

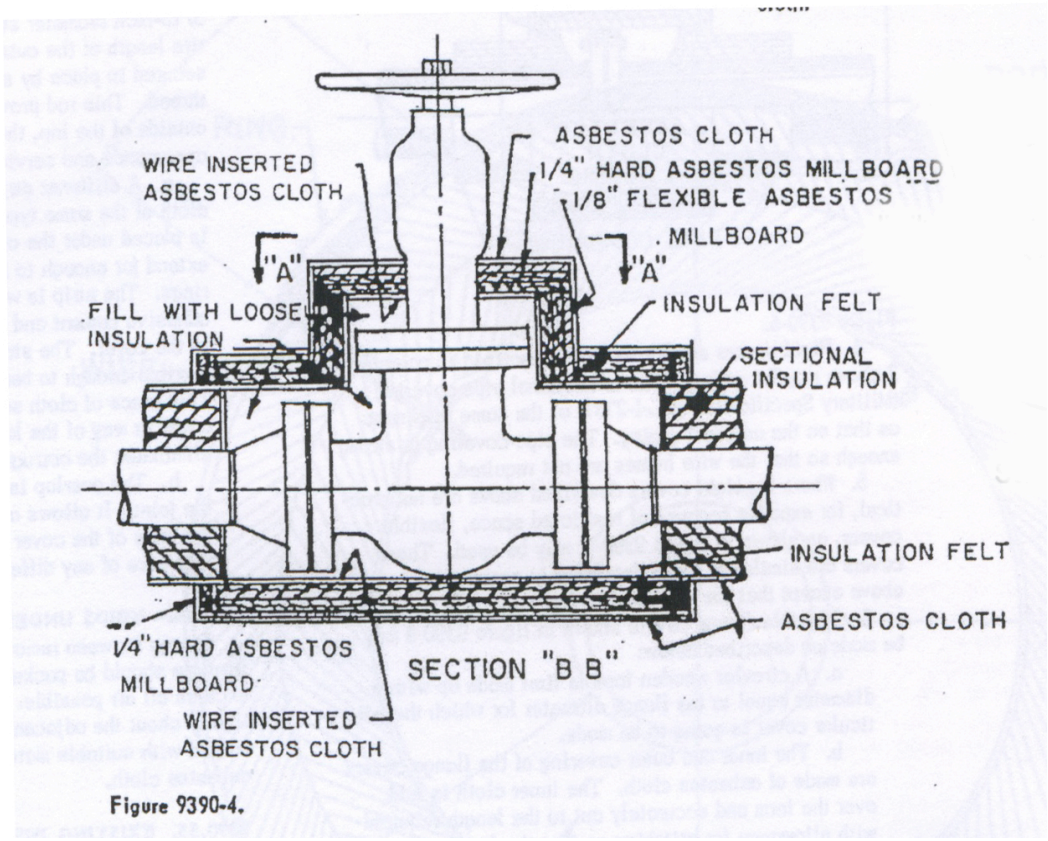

Figure 9390-4.

26. Garlock's gaskets did not emit asbestos fibers in their stationary form or in use when sandwiched between two metal flanges. It was only when the gaskets were cut, hammered, scraped, brushed or abraded that they could generate breathable asbestos fibers. That occurred when gaskets were shaped or removed from flange faces. Gaskets were cut from sheet material using shears or saws and by hammering the material out against the flange face. When gaskets were removed from flanges, they were normally degraded by years of existing in a hot

environment. Workers scraped the flange to remove the bulk of the gasket material, most often with a putty knife. Then the gasket residue would be removed by brushing with a hand or power wire brush.

27. But, before a gasket could be replaced, it was necessary to remove the thermal insulation material from around the joint or valve. This could be done with a knife or saw, but was commonly accomplished by beating the material with a hammer or other available tool. Regardless of the tool used, this process created a great deal of dust containing amosite asbestos. It was commonly described by workers as a "snowstorm" of dust.

Exposure Evidence — Epidemiology and Industrial Hygiene

28. Two studies of exposure to asbestos specifically from gasket removal work are inconclusive at best. There is a great deal of peer-reviewed scientific literature relating to asbestos exposure in general, with varying degrees of reliability. The most reliable and probative of those reports confirms that exposure to asbestos from end users of encapsulated asbestos products is minimal.

29. Fred Boelter testified about a simulation that he prepared. He is a certified industrial hygienist, professional engineer (civil and environmental) and licensed asbestos inspector with forty years experience. He constructed a sample

insulated pipe system inside of a sealed air chamber and collected air samples during insulation and gasket removal activities. He used a hammer to beat and break off the thermal insulation surrounding the pipe joint flanges and then used a putty knife and electric wire brush to remove the gasket and adhered gasket material from the flange surfaces. Analysis of the air samples taken during each activity demonstrated no quantifiable asbestos exposure from gasket removal. Also, whether dry or wet, and regardless of which tool was used, the OSHA exposure standard of 1 fiber/cc was not exceeded in any operation with the gasket. On the other hand, removal of the insulation material exceeded the 1 f/cc exposure standard by 50 to 80 times.

30. Mr. Boelter's study was well-conceived and carried out, but it suffers from the fact that it is a simulation and that it was recently constructed. It would be unusual in an actual work situation for gaskets to be removed soon after their installation. Normally years of use and degradation would take place prior to removal. In fact, Mr. Boelter's gaskets came off the flanges easily and largely intact which was not the normal experience in actual work environments. Consequently, Mr. Boelter's simulation is not probative of such actual work experience.

31. Dr. William Longo is a Ph.D. in Materials Science and Engineering who works for Materials Analytical Services, a private laboratory and consulting group. He performed a work practice simulation study of fiber release from gaskets in 2002, published an article about that study and has done some subsequent gasket studies.

32. Dr. Longo's studies produced fiber releases well above background levels, and he offered his opinion that fabrication and removal of gaskets would expose a person to significant, but varying, amounts of asbestos fibers depending on the size of the gasket, the amount of residue on the flange and the method of removal.

33. Dr. Longo's studies suffer from serious deficiencies and the court finds that they are not reliable:

a) The first supposed "work simulation" involved gluing a new gasket to a flange with epoxy and then abrading it with various methods. There is no testimony that would support that simulation as a practice that actually occurred in the workplace. Especially when Dr. Longo admits that the amount of dust produced depended in large part on the amount of gasket present, his grinding and abrading whole gaskets is not probative of what was produced by actual workers removing gasket residue.

b) Dr. Longo's "gasket studies" suffer from a list of deficiencies sufficient to render them useless. Some of the more glaring problems are : (i) The number of basic errors is remarkable for a supposed scientific study. Dr. Longo attempted to explain these as "typos," but many of the errors involve things such as misidentification of fibers and mislabeling of samples; (ii) The materials used in the studies were provided with funding by plaintiffs' attorneys, but that fact was not disclosed; (iii) The studies measured dust, but there was no showing of what, if any, of the dust contained asbestos fibers; (iv) The study used Tyndall lighting in a video, but there was no scientific purpose for this and nothing in the form of "scientific" results were reported as a result of the lighting; (v) The results were influenced by the overzealous techniques used which involved using tools above their safety ratings; (vi) some equipment used to measure dust concentrations malfunctioned and/or was not operated properly and led to puzzling results – such as measurement of more dust during a rest period than when actually working.

34. The appearance is that Dr. Longo's studies were carried out in such a way as to produce the highest results possible and to overdramatize the process. As such, the court cannot accept his studies or opinions as probative.

35. Dr. Longo's studies are pseudo-science at best. This is best demonstrated by comparison to the truly scientific study done by Dr. Lambertus Hesselink. Dr. Hesselink holds a Ph.D. in Applied Mechanics and Physics and is a professor in the electrical engineering and applied physics departments of Stanford University. His specialty is optics and nanophotonics. He performed an analysis that concluded that the bright spots in Dr. Longo's Tyndall lighting video could not possibly be respirable asbestos in the range of .01 to 3 microns in diameter. Dr. Hesselink's study focused on measuring the amount of light scattered by a single chrysotile fiber. The process is fully documented and is repeatable by other scientists who might want to test it. By contrast, the results from Dr. Longo's study could not be repeated, even by his own staff. Dr. Hesselink's study shows that under all circumstances, it is not possible for the human eye to see particles in the range of .01 – 3 microns in diameter and that the particles visible in Dr. Longo's video are not chrysotile fibers.

36. Finally, Mr. Boelter testified that there is no useful application for Tyndall lighting in industrial hygiene because it cannot be quantified. He further demonstrated that Tyndall lighting shows a great deal of visible "dust" generated when an electric wire brush is applied to a new metal flange *with no gasket on it.*

37. Larry Liukonen is a certified industrial hygienist who conducted gasket studies for the U.S. Navy in 1978. He studied all aspects of the life cycle of a gasket. His study involved monitoring workers at Bremerton Naval Shipyard during “rip out” operations that were part of maintenance on naval ships. The work monitored included insulation removal, forming gaskets from sheet material, and the full range of activities related to gasket removal and flange cleanup. The study demonstrated that there was exposure in the range of 3 to 5 f/cc for “manufacturing” gaskets from sheet material using shears and saws. Further, end users of gaskets did not have nearly that exposure — gasket removal produced only minimal detectable levels of dust and all samples were less than 1 f/cc; the range and average for hand scraping of gasket residue was .05 f/cc. Mr. Liukonen concluded from his study that there was no hazard associated with exposure to asbestos from compressed asbestos sheet gaskets. Mr. Liukonen also conducted a 1975 study of insulation exposure for the Navy. The exposures from thermal insulation consistently exceeded the short-term limits for asbestos exposure that were established at that time.

38. Dr. Carl Brodkin and Dr. Laura Welch both testified that any documented occupational exposure to chrysotile — regardless of how minimal — was sufficient to attribute it as a cause of mesothelioma. Dr. Brodkin is a physician in

Occupational and Environmental Medicine and Internal Medicine. Dr. Welch is a physician employed by the Center for Construction Research and Training (formerly known as the Center to Protect Workers' Rights). Their opinions were based on the review of a number of studies in peer-reviewed literature. A fundamental flaw in their analyses is that the studies on which they rely all involve people in very high exposure settings — such as miners or manufacturing/textile workers.

39. They then apply the findings from such high-dose occupations to low-dose applications without an adequate basis. Moreover, their methodology does not consider the portion of a person's exposure to a particular product by time or intensity.

40. One study relied upon by Dr. Welch involved a textile plant in North Carolina. This study purportedly shows that chrysotile asbestos was processed in the plant and concludes that the asbestos disease resulting in people who worked there was a result of chrysotile exposure. But, the study fails to account for asbestos exposures that those workers may have had at other jobs or elsewhere. Consequently, whether or not there was chrysotile at that plant, the conclusion reached is an inappropriate speculation.

41. Drs. Brodkin and Welch discount contrary studies for certain flaws while overlooking similar or more significant flaws in the studies upon which they rely. There appear to be a

host of scientific studies in the peer-reviewed literature that can be cited for both sides of the issues involved here. Some are financed by companies with potential liability and some are financed by those promoting claimants' interests. All have flaws and drawbacks of some kind that can call their conclusions into question.

42. Dr. David Garabrant, M.D., is a physician specializing in occupational medicine and epidemiology, the study of the distribution and causes of disease conditions in human populations. He is associated with the University of Southern California Medical School and maintained a clinical practice treating patients through 2011.

43. Dr. Garabrant prepared a "meta-analysis by occupation" from all of the reliable studies that report the results of exposure to asbestos. In that analysis he determined a risk ratio for various occupations. From his analysis he concluded that there is a background rate of mesothelioma in all populations. He further concluded that the occupations that demonstrate significantly increased risk of developing mesothelioma are those involved with thermal insulation.

44. Of particular interest to Dr. Garabrant were the studies and results for "vehicle mechanics" since it is one of the few occupations where workers are exposed to chrysotile, but not amosite asbestos. There has been no showing of any

increased risk of mesothelioma in vehicle mechanics even though they work with brake linings, clutches, and gaskets that contained chrysotile. The risk ratio for vehicle mechanics was about the same as for teachers and office workers.

45. Dr. Garabrant collected all of the reliable scientific studies on whether low-dose exposure to chrysotile causes mesothelioma. He found no statistically significant association between low dose chrysotile exposure and mesothelioma.

46. Dr. Garabrant's analysis appears thorough and based on appropriate scientific methods. The court finds it reliable and persuasive.

47. The court finds no probative value to the statements of safety and regulatory agencies or to the warnings contained in Garlock's own Materials Safety Data Sheets. Such statements simply involve something quite different than the issues involved here. Many, if not all, safety and regulatory bodies have issued statements, policies or regulations regarding asbestos exposure. But, these cannot be probative on the issue of causation because of the differences in the way courts and regulatory authorities assess risk. See, In re W.R. Grace & Co., 355 B.R. 462, 468-469 (Bankr. D. Del. 2006). Regulatory authorities use "precautionary principles" to carry out their mandates and use linear projections into a zone of inference of theoretical risk that are not appropriate for judicial

determinations, including causation. Consequently, agency statements, policies and regulations – and company warnings required by them – are simply not relevant to estimation of Garlock's aggregate asbestos liability.

48. In conclusion: The court does not believe that it is necessary for it to determine – one way or the other – whether low dose exposure to chrysotile in Garlock gaskets could cause mesothelioma. Because the court is estimating Garlock's aggregate asbestos liability across all cases, it is sufficient to conclude that Garlock has demonstrated that its products resulted in relatively low exposure of a relatively lower potency asbestos to a limited population and that the population exposed to Garlock's products was necessarily exposed to far greater quantities of higher potency asbestos from the products of others.

SOCIAL SCIENCE EVIDENCE

49. Garlock was a relatively small player in the asbestos tort system. It is best described by one of its present opponent's experts as "a rather minor producer of asbestos products ... They made a gasket. And it's not a significant product, it's not a significant defendant." (Testimony of Dr. Peterson in In re Western Asbestos/McArthur, Nov. 13, 2003).

50. Nevertheless, Garlock was an active litigant in the tort system for thirty years – until its insurance ran out.

During that time it tried to verdict a number of cases: it won defense verdicts in a very high percentage of those trials, but it suffered million-plus dollar judgments in a few cases. Garlock negotiated settlements in over 99% of the twenty thousand mesothelioma cases in which it was a defendant. Garlock's evidence at the present hearing demonstrated that the last ten years of its participation in the tort system was infected by the manipulation of exposure evidence by plaintiffs and their lawyers. That tactic, though not uniform, had a profound impact on a number of Garlock's trials and many of its settlements such that the amounts recovered were inflated.

51. There are a number of elements that make asbestos tort litigation unique:

a. Mesothelioma cases are always "death" cases with the potential for large verdicts. Living plaintiffs are often given preferential trial settings that can increase the amount of the potential verdict.

b. The 30 to 40 year latency period between exposure and onset of disease means that a plaintiff may have had many exposures over a long period of time, many of which were in the distant past. Also, because disease is not immediate, the victim was likely not aware of the injury as it occurred.

Consequently, the plaintiff may not be able to specifically identify the responsible tortfeasors.

c. As cases are worked up over years of practice, plaintiffs' lawyers develop evidence of asbestos exposure at certain job sites or in certain occupations — from product records, worker depositions and the like. Consequently, in many instances, the exposure evidence is under the control of the plaintiffs' lawyer rather than the plaintiff.

d. The Complaint in the typical asbestos lawsuit names 30 to 100 defendants. In any such case, there are the primary "targets" and many lesser defendants. The plaintiff may not even have exposure evidence for some of the defendants.

52. One of Garlock's primary defenses was to deflect responsibility to other co-defendants. Garlock's contention was that its encapsulated chrysotile product did not cause injury. Evidence of the plaintiffs' exposure to other co-defendants products was essential to its defense and its negotiating position.

53. The asbestos tort litigation system has evolved through thirty-plus years of moves and counter-moves as circumstances changed and plaintiffs' lawyers sought to increase

recoveries for their clients and defendants' lawyers sought to limit their clients' losses.

54. In the early years, the primary focus was on claims for lung cancer, asbestosis and other diseases. There were some abuses involving mass screenings of potential claimants and bogus diagnoses of the disease. Since 2000, the focus of litigation has been on claims for mesothelioma for which there is more certainty as to diagnosis of the disease and to causation.

55. At the outset, the largest participant in the asbestos tort litigation system was Johns Manville Corporation ("Manville"). Manville had – by far – the largest share of the United States asbestos market as a manufacturer of asbestos insulation along with other end-use asbestos products and asbestos materials used for manufacture by others. Manville was the primary defendant in virtually every asbestos tort complaint and generally drove the defense of the litigation. In 1982, Manville filed bankruptcy and exited the tort system. After several years, a trust was established and it re-entered the tort system and paid claims to the point the fund was exhausted and it had to reorganize again. Ultimately, the Johns Manville Trust was created and began paying claims outside the tort system pursuant to the terms of its trust distribution procedures.

56. A number of defendants banded together to attempt to resolve claims as a group. First, a group known as the Asbestos Claims Facility existed for several years and then dissolved. Later, another group (of many of the same companies) formed and was called Center for Claims Resolution. It dissolved in January 2001, thus removing from the system the single largest source of payments.

57. As time passed and resources were exhausted, various defendants filed bankruptcy cases and exited the tort system. In the 1990s companies such as Celotex Corporation, Eagle Picher, and Keane Corporation filed bankruptcy cases. From 2000 to 2005, what Garlock has referred to as the "bankruptcy wave" occurred as a number of major asbestos defendants filed bankruptcy cases. These included: Owens Corning Fibreboard, Pittsburgh Corning, U.S. Gypsum, Babcock & Wilcox, Federal Mogul, Turner & Newell, Armstrong World Industries, and W.R. Grace. This was actually the second such "wave," but its impact on Garlock was more pronounced because it took out of the system virtually all of the remaining thermal insulation defendants. These were the "big dusties" as the ACC's counsel referred to them. After the first "wave" Garlock still had viable insulation co-defendants on whom to lay off responsibility. But, the second "wave" wiped out insulation manufacturers as co-defendants in the tort system. The combination of the

bankruptcies of the remaining "big dusties" and the dissolution of the Center for Claims Resolution removed from the system most of the funding for liability payments.

58. Most significant to Garlock, though, was the fact that often the evidence of exposure to those insulation companies' products also "disappeared." This occurrence was a result of the effort by some plaintiffs and their lawyers to withhold evidence of exposure to other asbestos products and to delay filing claims against bankrupt defendants' asbestos trusts until after obtaining recoveries from Garlock (and other viable defendants). Garlock presented substantial evidence of this practice and a few examples will demonstrate the pattern:

a. One of the leading plaintiffs' law firms with a national practice published a 23-page set of directions for instructing their clients on how to testify in discovery.

b. It was a regular practice by many plaintiffs' firms to delay filing Trust claims for their clients so that remaining tort system defendants would not have that information. One plaintiff's lawyer stated his practice as seemingly some perverted ethical duty:

> "My duty to these clients is to maximize their recovery, okay, and the best way for me to maximize their recovery is to proceed against solvent viable non-bankrupt

defendants first, and then, if appropriate, to proceed against bankrupt companies."

c. In 15 settled cases, the court permitted Garlock to have full discovery. Garlock demonstrated that exposure evidence was withheld in *each and every one* of them. These were cases that Garlock had settled for large sums. The discovery in this proceeding showed what had been withheld in the tort cases — on average plaintiffs disclosed only about 2 exposures to bankruptcy companies' products, but after settling with Garlock made claims against about 19 such companies' Trusts.

59. The ACC has attempted to minimize the significance of Trust claims as being somehow disconnected from exposure evidence. That argument is belied by examples of cases where exposure evidence was withheld.

60. In a California case involving a former Navy machinist mate aboard a nuclear submarine, Garlock suffered a verdict of $9 million in actual damages. The plaintiff did not admit to any exposure from amphibole insulation, did not identify any specific insulation product and claimed that 100% of his work was on gaskets. Garlock attempted to show that he was exposed to Unibestos amphibole insulation manufactured by Pittsburgh Corning. The plaintiff denied that and, moreover, the plaintiff's lawyer fought to keep Pittsburgh Corning off the

verdict form and even affirmatively represented to the jury that there was no Unibestos insulation on the ship. But, discovery in this case disclosed that after that verdict, the plaintiff's lawyers filed 14 Trust claims, including several against amphibole insulation manufacturers. And most important, the same lawyers who represented to the jury that that there was no Unibestos insulation exposure had, seven months *earlier*, filed a ballot in the Pittsburgh Corning bankruptcy that certified "under penalty of perjury" that the plaintiff had been exposed to Unibestos insulation. In total, these lawyers failed to disclose exposure to 22 other asbestos products.

61. A Philadelphia case involved a laborer and apprentice pipefitter in the Philadelphia shipyard which Garlock settled for $250,000. The plaintiff did not identify exposure to any bankrupt companies' asbestos products. In answers to written interrogatories in the tort suit, the plaintiff's lawyers stated that the plaintiff presently had "no personal knowledge" of such exposure. However, just six weeks earlier, those same lawyers had filed a statement in the Owens Corning bankruptcy case, sworn to by the plaintiff, that stated that he "frequently, regularly and proximately breathed asbestos dust emitted from Owens Corning Fiberglas's Kaylo asbestos-containing pipe covering." In total, this plaintiff's lawyer failed to disclose exposure to 20 different asbestos products for which he made

Trust claims. Fourteen of these claims were supported by sworn statements, that contradicted the plaintiff's denials in the tort discovery.

62. Another case in New York was settled by Garlock for $250,000 during trial. The plaintiff had denied any exposure to insulation products. After the case was settled, the plaintiff's lawyers filed 23 Trust claims on his behalf – eight of them were filed within twenty-four hours after the settlement.

63. In another California case, Garlock settled with a former Navy electronics technician for $450,000. The plaintiff denied that he ever saw anyone installing or removing pipe insulation on his ship. After the settlement, the plaintiff's lawyers filed eleven Trust claims for him – seven of those were based on declarations that he personally removed and replaced insulation and identified, by name, the insulation products to which he was exposed.

64. In a Texas case, the plaintiff received a $1.35 million verdict against Garlock upon the claim that his only asbestos exposure was to Garlock crocidolite gasket material. His responses to interrogatories disclosed no other product to which he was exposed. The plaintiff specifically denied any knowledge of the name "Babcock & Wilcox" and his attorneys represented to the jury that there was no evidence that his

injury was caused by exposure to Owens Corning insulation. Garlock's discovery in this case demonstrated that the day before the plaintiff's denial of any knowledge of Babcock & Wilcox, his lawyers had filed a Trust claim against it on his behalf. Also, after the verdict, his lawyers filed a claim with the Owens Corning Trust. Both claims were paid — upon the representation that the plaintiff had handled raw asbestos fibers and fabricated asbestos products from raw asbestos on a regular basis.

65. The court permitted Garlock to have full discovery in only 15 closed cases. In each and every one of those cases it disclosed that exposure evidence was withheld. For fifteen plaintiffs represented by five major firms, the pattern of non-disclosure is the same:

Case	Disclosed	Not Disclosed
1	2	22
2	7	25
3	3	23
4	6	19
5	2	22
6	1	14
7	0	11
8	5	11
9	0	25
10	0	20
11	1	23
12	3	26
13	1	25
14	1	14
15	0	4

66. These fifteen cases are just a minute portion of the thousands that were resolved by Garlock in the tort system. And

they are not purported to be a random or representative sample. But, the fact that *each and every one of them* contains such demonstrable misrepresentation is surprising and persuasive. More important is the fact that the pattern exposed in those cases appears to have been sufficiently widespread to have a significant impact on Garlock's settlement practices and results. Garlock identified 205 additional cases where the plaintiff's discovery responses conflicted with one of the Trust claim processing facilities or balloting in bankruptcy cases. Garlock's corporate parent's general counsel identified 161 cases during the relevant period where Garlock paid recoveries of $250,000 or more. The limited discovery allowed by the court demonstrated that almost *half* of those cases involved misrepresentation of exposure evidence. It appears certain that more extensive discovery would show more extensive abuse. But that is not necessary because the startling pattern of misrepresentation that has been shown is sufficiently persuasive.

67. In contrast to the cases where exposure evidence was withheld, there were several cases in which Garlock obtained evidence of Trust claims that had been filed and was able to use them in its defense at trial. In three such trials, Garlock won defense verdicts, and in a fourth it was assigned only a 2% liability share.

68. The court is also persuaded by the observations of Garlock's outside lawyers, Messrs. Turlick (on the East Coast) and Glaspy (on the West Coast) who were involved in negotiating and trying cases; and of its General Counsel, Mr. Magee, who was involved in approving settlements. They observed that when the thermal insulation defendants left the tort system, evidence of exposure to their products "disappeared." That observation is corroborated by the discovery in this proceeding. They uniformly explained how their negotiating and trial strategies would have changed if they had had the exposure evidence that disappeared when the insulation defendants exited from the tort system.

69. The ACC correctly notes that the standard for making Trust claims is different than for establishing a tort claim. Trusts permit "placeholder" claims and also often allow claims based upon working at a certain location where asbestos exposure was presumed. But, relaxed Trust claiming rules do not explain or exculpate the "disappearance" of exposure evidence noted here. Whether "bare bones," "placeholder" or "presumptive," the Trusts require some "meaningful and credible" exposure evidence to pay a claim. But, most important, while it is not suppression of evidence for a plaintiff to be unable to identify exposures, it *is* suppression of evidence for a plaintiff to be unable to identify exposure in the tort case, but then later

(and in some cases previously) to be able to identify it in Trust claims. It is that practice that prejudiced Garlock in the tort system – and makes its settlement history an unreliable predictor of its true liability.

70. The effect of withholding exposure evidence extended well beyond the individual cases involved because it was concentrated in high-dollar "driver" cases. Garlock's settlement of cases was not a series of isolated individual events, but rather a more unified practice developed over years of dealing with a finite group of plaintiffs' lawyers on a regular basis. Cases often were settled in groups for one sum that was to be divided among the group by the plaintiffs' lawyers without regard for a liability determination in any one case. But, cases of significant potential liability were often settled as part of such a group settlement. Such "driver" cases would be specifically negotiated with an additional amount to be spread among the rest of the group. Whether settled individually or with a group or tried to verdict, the cases of large potential liability had a significant effect on other pending and future cases. Thus, their impact was compounded well beyond the individual "driver" case itself.

71. The withholding of exposure evidence by plaintiffs and their lawyers was significant and had the effect of unfairly inflating the recoveries against Garlock from 2000 through 2010.

The court makes no determination of the propriety of that practice. The only thing that is important for this proceeding is that the practice was sufficiently widespread to render Garlock's settlements unreliable as a predictor of its true liability. Consequently, Garlock's settlement and verdict history during that period does not reflect its true liability for mesothelioma in the pending and future claimants.

72. Another factor also makes Garlock's settlement amounts a dubious reflection of liability. One of the unique aspects of asbestos injury litigation is its high cost to all parties. The cost of expert witnesses alone is staggering because of the array of disciplines needed. A typical trial would require experts in industrial hygiene and multiple medical disciplines. The "science evidence" presented at this hearing was representative of an individual trial in the tort system and involved seven expert witnesses, including five with Ph.D. or M.D. degrees.

73. In addition, the time and effort required to prepare and try an asbestos case is significant. Because of the number of defendants and the length of work history to be examined, the deposition of the plaintiff often requires weeks. Preparation also often requires extensive investigative efforts to determine the products to which the plaintiff was exposed during a forty-year work life.

74. Garlock considered its potential liability from an adverse verdict in evaluating cases – certainly the major cases it faced. But, for Garlock, the expense of preparing, trying and winning an asbestos injury case far exceeded the $75,000 average settlement paid to claimants. The overwhelming majority of cases Garlock settled were done in groups of large numbers of claims without real analysis of the "liability" to any individual claimant. Garlock has consistently maintained that its products did not cause asbestos disease. But, it recognized that factors such as an inability to establish its defenses, a sympathetic plaintiff, a sympathetic jury, a particularly effective plaintiff's lawyer or some combination of these could result in a large adverse verdict in such "driver" cases. But, the overwhelming majority of cases were settled in groups without regard to liability and virtually entirely for cost avoidance. Many cases ultimately were simply dismissed.

PRECEDENT FOR ASBESTOS LIABILITY ESTIMATION

75. The Bankruptcy Code authorizes estimations of liability in certain situations, see 11 U.S.C. § 502(c) (authorizing estimation of any contingent or unliquidated claim if fixing or liquidating the claim would unduly delay a case), but the Code does not explain *how* claims are to be estimated. S. ELIZABETH GIBSON, FED. JUDICIAL CTR., JUDICIAL MANAGEMENT OF MASS TORT BANKRUPTCY CASES 90 (2005) ("If a judicial estimation is required,

neither section 502(c) nor any provision of the Bankruptcy Rules provides any guidance about the method the judge should use"). This court, however, is not the first to attempt a global estimation of asbestos liability and has the benefit of the collected experience of the courts that have previously conducted estimations. None of these cases is controlling here; and none of them deal with the fact pattern presented here. But, they do form a base on which the court's crystal ball can rest. The following are brief descriptions of previous estimations, in chronological order, that this court finds particularly relevant and some general lessons that can be learned from the earlier opinions.

Eagle-Picher Industries, Inc.

76. Eagle-Picher filed for bankruptcy protection in 1991 as a result of claims filed by workers suffering from diseases related to Eagle-Picher's asbestos-containing sealant that was used in shipyards in the 1940s and 1950s. Barnaby J. Feder, Bankruptcy by Eagle-Picher Halts Asbestos Settlement, N.Y. TIMES, Jan. 8, 1991, available at http://www.nytimes.com/1991/ 01/08/business/. Prior to the estimation, Eagle-Picher, the Injury Claimants' Committee ("ICC"), and the Future Claims Representative agreed to value the asbestos liability at $1.5 billion and proposed a consensual plan. In re Eagle Picher Indus., Inc., 189 B.R. 681, 682

(Bankr. S.D. Ohio 1995). The Equity Committee, representing the stockholders of Eagle-Picher, and the Unsecured Claimants' Committee opposed the consensual plan, and each party presented an expert and an estimate at the hearing. Id. After hearing the evidence, the court listed the seven factors that it found important to estimation. Id. at 690. First, the estimate should be based on the debtor's history (as opposed to other asbestos defendants' histories) without ruling out consideration of trends. Id. Next, the court should estimate the total number of expected claims. Id. at 691. The claims should be categorized by disease, occupation, and other considerations. Id. Valuation should be based on settlement values closest in time to the date the debtor filed bankruptcy. Id. The indemnity values should increase over time at a reasonable rate. Id. The court should use a "lag time gleaned from the tort system" to accurately predict future claim values. Id. Finally, a discount rate should be applied to bring the future nominal value of claims back to the petition date. Id. The court applied those factors, decided the ICC's estimate of present claims and the debtors' estimate of the future claims were the most accurate, and estimated Eagle-Picher's asbestos liability at $2.5 billion. Id. at 686, 691, 692. The court concluded the opinion by denying the UCC's motion to conduct discovery on a sample of the claimants as unnecessary in light

of the information provided by the debtors' claims database. Id. at 692.

USG Corporation

77. USG, a drywall manufacturer that used asbestos in its plasters and joint compounds, filed its bankruptcy case in 2001. Melita Marie Garza, USG Files for Bankruptcy, CHI. TRIB., June 26, 2001, available at http://articles.chicagotribune.com/ 2001-06-26/. The primary issue in the USG estimation was how to estimate: the debtors wanted to challenge the validity of claims during the estimation process, while the Asbestos Claimants' Committee and the Future Claimants' Representative sought to estimate based on the debtors' pre-petition settlement history. In re USG Corp., 290 B.R. 223, 224 (Bankr. D. Del. 2003). The court noted that this issue "may lie at the heart of all asbestos bankruptcies," id., and expressed sympathy for each position. Compare id. ("That shareholders' equity may be extinguished to compensate those whom they believe suffered no tangible harm is a bitter corporate pill to swallow."), with id. ("It is similarly distasteful medicine to tort claimants to hear that claims identical to those which were either litigated to judgment or settled in the state tort system over the course of many years could be eliminated by an imaginative application of federal procedural rules."). However, the dispute over the validity of claims focused on the "unimpaired" claimants and

there was some question as to whether USG would be insolvent based solely on the cancer claims that were not in dispute, so the court decided to postpone the expense of substantive estimation until USG's solvency in regard to the cancer claims could be established. Id. at 225–27. The court also authorized a lengthy claim form for all cancer claimants to complete. Id. at 227–29. The parties eventually settled their estimation dispute. James P. Miller, Accord to Resolve USG Asbestos Claims, CHI. TRIB., Jan. 31, 2006, available at http://articles.chicagotribune.com/2006-01-31/.

G-I Holdings, Inc. ("G-I I")

78. G-I Holdings filed a Chapter 11 petition on January 5, 2001. In re G-I Holdings, Inc. ("G-I I"), 323 B.R. 583, 587 (Bankr. D.N.J. 2005). Most of G-I's asbestos liability derived from its indirect subsidiary and main asset, Building Materials Corporation of America ("BMCA"), a manufacturer of roofing and building products. Id. at 588. Although G-I had been named in about 500,000 asbestos lawsuits, BMCA claimed that its products did not contain asbestos. Id. & n.2. The dispute in G-I I involved the method of estimation. Id. at 587. While the Official Committee of Asbestos Claimants wanted to estimate G-I's "asbestos liability in the aggregate" using the company's pre-petition claims resolution history, the debtor proposed to deal with the "asbestos liquidation crisis" by applying a

"medical matrix" and a "claims liquidation committee." Id. at 587, 590. Under the debtor's proposal, the claims liquidation committee, appointed by the debtor, would determine whether each claimant had an allowed claim under a process using several vague, undefined standards. Id. at 590–97. The Official Committee of Asbestos Claimants proposed a more traditional approach to estimation and claimed that G-I's proposal was an improper liquidation of claims that violated the claimants' rights to jury trials rather than an estimation. Id. at 597–98, 600. The court rejected G-I's argument that claimants did not have constitutional or statutory jury trial rights, id. at 603–16, but held that courts can "disallow" invalid claims without "liquidating" them, id. at 613, and allowed G-I the opportunity to move for summary judgment on some issues on a "class-wide consolidated basis" pursuant to Federal Rule of Bankruptcy Procedure 7042, id. at 625. The court decided to estimate pursuant to the historical claims-resolution approach advocated by the Official Committee of Asbestos Claimants without deciding on all of the details of the future estimation. Id. at 622–24.

Owens Corning

79. Owens Corning was a high-profile asbestos defendant because of its widely distributed and very "dusty" insulation product, Kaylo. Owens Corning v. Credit Suisse First Boston, 322 B.R. 719, 722 (D. Del. 2005). Before seeking bankruptcy

protection in October 2000, Owens Corning resolved more than 330,000 claims. Id. at 719, 722. The parties disputed how the debtor's liability should be estimated and the number and validity of future claims; however, the dispute was between the Asbestos Claimants and the Future Representative, on one side, and the banks and bondholders, on the other, and Owens Corning did "not argue for any particular valuation." Id. at 721. The Asbestos Claimants and the Future Representative wanted to estimate using "the value of the claims in the tort system," while the banks proposed to value claims based on the projected recovery from a trust in the future. Id. The court agreed with the claimants' method because claims must be valued as of the petition date relying on state law, which "necessarily means that the claims are to be appraised on the basis of what would have been a resolution of the claims in the absence of bankruptcy." Id. at 721–22. The court, however, did not simply extrapolate from historical values because the banks showed factors, such as the availability of punitive damages in the tort system, marketing for claimants that had already reached "its maximum impact," and pre-petition changes in asbestos litigation, that could have an impact on values in the future. Id. at 722–25. The court also noted that "since mathematical precision cannot be achieved in the prediction being undertaken, it is important that we not pretend to have achieved

mathematical accuracy." Id. at 725. Four experts testified. Id. at 721. The court discounted the testimony of the banks' expert because he disagreed with the other experts on many issues and adopted every assumption that would decrease his estimate. Id. at 725. The court also discounted the estimate for the Asbestos Claimants because its expert assumed that claims would continue to increase and did not account for changes in asbestos litigation. Id. The court decided that the most accurate estimate was between the estimates of the Future Representative's expert ($8.15 billion) and the debtor's expert ($6.5–6.8 billion) and set Owens Corning's liability at $7 billion. Id.

Federal-Mogul Global, Inc.

80. Like Owens Corning, Federal-Mogul was a high-profile asbestos defendant prior to filing its bankruptcy petition on October 1, 2001. In re Federal-Mogul Global, Inc., 330 B.R. 133, 136–38 (D. Del. 2005). Federal-Mogul's liability came from several sources, including Limpet, a spray-on product made of "pure" amosite or crocidolite asbestos and used for fireproofing and insulation; Keasby and Mattison Co., a "mini-Johns Manville" former subsidiary that sold a wide variety of asbestos products; and ownership of asbestos mines in Africa and Canada. Id. In this case, the estimation dispute pitted the personal injury claimants, including the Official Committee of Asbestos

Claimants and the representative of future claimants, against property damage claimants. Id. at 135. Federal-Mogul did not appear at the estimation hearing. Id. at 135 n.2. Prior to estimation, various creditor committees, including the personal injury claimants, but not the property damage claimants, agreed to a "Central Deal" that involved a negative or inverse correlation between the personal injury claims and the non-personal injury claims (i.e., a larger personal injury estimate would result in the payment of a lower percentage of the non-personal injury claims). Id. at 136. The experts agreed on a basic formula for estimating based on Federal-Mogul's claims-resolution history (multiplying the number of claims by the average settlement and the percent of claims historically paid), but each expert's assumptions about incidence and propensity to sue, among other things, led to a wide range of projected liability. Id. at 144–49. The court decided that estimation should focus on Federal-Mogul's historical practices rather than discovery of individual claims and that "the only sound approach [was] to begin with what [was] known; namely, the data in the [debtors'] Database." Id. at 155, 157. The court discussed and endorsed the Eagle-Picher framework and factors for estimation. Id. at 157. The court concluded that the methodology of the personal injury claimants' expert, Dr. Peterson, more closely adhered to the Eagle-Picher requirements (while noting some

disagreement with Peterson's increasing propensity model) and estimated Federal-Mogul's asbestos liability in the United States at $9 billion, in between Peterson's two estimates of $8.2 billion and $11 billion. Id. at 164.

G-I Holdings, Inc. ("G-I II")

81. The Bankruptcy Court for the District of New Jersey revisited estimation issues in the G-I Holdings case approximately 18 months after G-I I in order to settle disputes over estimation methodology and related discovery. In re G-I Holdings, Inc. ("G-I II"), 2006 WL 2403531, at *1 (Bankr. D.N.J. Aug. 11, 2006). G-I believed the historical data in its claims database was only the starting point for the estimation and sought extensive discovery of a random sample of 2000—2500 individual claimants. Id. at *4. G-I's discovery proposal included a neutral panel of medical experts that would review the medical evidence and determine causation. Id. at *9. The Official Committee of Asbestos claimants and the Legal Representative of Present and Future Holders of Asbestos-Related Demands wanted to rely primarily on the claims database and argued that discovery of individual claimants would trigger the claimants' due process rights. Id. at *5. The claimants' representatives also urged the court to reconsider its previous ruling that G-I could move for class-wide summary judgment during the estimation process. Id. at *14. The court declined

to select a particular estimation methodology and decided to allow limited discovery of the claimants but rejected most of the "laundry list" proposed by G-I, including the medical panel. Id. at *19–20, *23. The court did not reconsider its decision to allow motions for summary judgment but did acknowledge concerns about due process and the high burden G-I would have to overcome. Id. at *20.

W.R. Grace & Co.

82. W.R. Grace filed its bankruptcy petition on April 2, 2001 in order to deal with extensive asbestos liability from its distribution of chemicals and building materials and ownership of contaminated mines. Michael Brick with Maureen Milford, Grace Files for Chapter 11, Citing Cost of Asbestos Suits, N.Y. TIMES, Apr. 3, 2001, available at http://www.nytimes.com/2001/04/03/; Sonja Lee, Ground Zero: Residents Still Counting Costs of Mining Zonolite Mountain, GREAT FALLS TRIB., Mar. 8, 2004, available at http://www.greatfallstribune.com/. A major issue in the case was whether Grace bore any liability for property damage caused by its Zonolite attic insulation. See In re W.R. Grace & Co., 355 B.R. 462, 466 (Bankr. D. Del. 2006) (noting the large number of potential claims from the 3–30 million homes with Zonolite). Grace used vermiculite, a non-asbestos mineral, in its Zonolite, but the mine in Libby, Montana where Grace obtained the vermiculite was contaminated with asbestos. Id. at

468. Grace admitted that Zonolite contained a small amount of asbestos that could be released when homeowners disturbed the insulation but argued that the product did not create an unreasonable risk of harm sufficient to maintain liability for property damage under consumer protection statutes. Id. at 468, 470, 473. The property damage claimants believed asbestos contamination and release was sufficient for liability. Id. at 468. The court reviewed the relevant epidemiology and regulatory standards and agreed with Grace that Zonolite did not create an unreasonable risk of harm while reserving judgment on other theories of liability. Id. at 468, 482–94.

Specialty Products

83. The most recent asbestos estimation occurred in In re Specialty Products Holding Corp., Nos. 10-11780, 10-11779 (Bankr. D. Del. May 20, 2013). Specialty Products sought bankruptcy protection on May 31, 2013, primarily due to asbestos liability from a "do-it-yourself" joint compound product marketed by its Bondex subsidiary. Id. at 3–7, 22. The debtors argued that their claims resolution history did not accurately represent their actual legal liability because the settlement amounts spiked in 2000 due to the bankruptcies of other defendants, they had less liability because their joint compound only contained the less potent chrysotile type of asbestos, there was no evidence of causation presented at the estimation

trial, and their pre-petition settlements could not represent liability because of their small market share. Id. at 7, 9, 11 n.24, 16–17. The court declined to follow Specialty Products's "novel approach" in favor of the more traditional approach advocated by the Asbestos Creditors' Committee and the Future Claimants' Representative, holding that "[i]n estimation proceedings the Court is to determine [the debtors' total liability for present and future claims caused by their asbestos products] based on the Debtors' tort system claiming history." Id. at 1, 3. The court set the debtors' total liability at $1.166 billion. Id. at 50.

Lessons Learned

84. While there are significant differences in the underlying facts and the procedural approaches in each prior estimation, the court recognizes several general principles that will help decide the issues before the court in this case.

85. Fair Estimates: Every court that has estimated the asbestos liability of a debtor has attempted to reach a fair estimate based on the particular facts at issue. See, e.g., Federal-Mogul, 330 B.R. at 137 (noting that the purpose of estimation is to determine the amount of a debtor's asbestos liability rather than to determine the viability of a proposed plan of reorganization). Courts have recognized the validity of the competing concerns of the litigants and attempted to reach

the proper resolution. See USG, 290 B.R. at 224; G-I I, 323 B.R. at 623 ("On one hand, thousands of innocent individuals may have been legitimately harmed by the products manufactured by the Company's predecessors, and these individuals should at the very least be afforded the opportunity to seek compensation for their damages. On the other hand is the real possibility that a once viable company will become extinct (with its own attendant repercussions such as loss of jobs, loss of business for third-party suppliers, and loss of shareholder equity) based upon the insurmountable personal injury claims facing the estate."). Even in cases where some of the parties have negotiated a plan with its own estimate of asbestos liability, courts recognize that they should make their own estimates of liability (instead of relying on the estimate in the proposed plan). See, e.g., Eagle-Picher, 189 B.R. at 682.

86. Debtor's Role in Estimation: Estimations in asbestos bankruptcies are frequently conducted after the parties (or some of the parties) have agreed to a plan of reorganization that includes a consensual estimate of liability. See, e.g., id. (discussing the plan and estimation of liability proposed jointly by the debtors, the Injury Claimants' Committee, and the Future Claims Representative). It is not unusual for a debtor to abstain from participating in estimation disputes among other parties. See, e.g., Federal-Mogul, 330 B.R. at 135 & n.2; Owens

Corning, 322 B.R. at 720–21 (noting that the estimation battle pits the Asbestos Claimants Committee and the Future Claims Representative against the "Banks" and "Bondholders" while the debtor "does not argue for any particular valuation"). Although the not-infrequent lack of participation by the debtor is an interesting aspect of prior estimation proceedings, there are also many cases where the debtor does litigate its estimated liability. See, e.g., Specialty Products, slip op. at 1–2 (debtors estimate net present value liability at $300–575 million while the Asbestos Creditors' Committee and the Future Claimants' Representative assert much higher estimates ($1.255 billion and $1.1 billion, respectively)); Grace, 355 B.R. at 464–65; G-I I, 323 B.R. at 587; USG, 290 B.R. at 224.

87. Type of Asbestos Products: In this case, the Debtors argue that their products produce a small dose of a less potent form of asbestos. The Debtors' argument focuses on disputing the causation element necessary to establish their liability for the mesothelioma suffered by the claimants. Most historical asbestos estimations did not involve low-dose producers that disputed causation. In some cases, the types of products produced by the debtors were apparently not an important issue, as the courts did not even describe the products produced by the debtors. See, e.g., USG, 290 B.R. at 223–229; Eagle-Picher, 189 B.R. at 681–692. In other cases, the types of products produced

by the debtors released higher amounts of asbestos. See, e.g., Federal-Mogul, 330 B.R. at 137; Owens Corning, 322 B.R. at 722 ("[Owens Corning's] principal asbestos-containing product, a high-temperature insulation material called Kaylo, was very widely distributed, and was particularly "dusty"—i.e., capable of widespread air-borne distribution."). Nevertheless, there is great variety in the history of asbestos litigation, and the court does not mean to suggest that it is the first to consider the low-dose and lack of causation arguments. See, e.g., Specialty Products, slip op. at 9, 11 n.24 (reviewing debtors' arguments regarding fiber type and causation); Grace, 355 B.R. at 468; USG, 290 B.R. at 225 (discussing the debtors' arguments that many claimants do not have valid claims, claimants cannot prove exposure to their products, and chrysotile asbestos does not cause mesothelioma); Eagle-Picher, 189 B.R. at 687 (rejecting a distinction based on fiber type).

88. Use of Debtor's Claims Resolution History: Most prior asbestos estimations have used the debtor's pre-bankruptcy history of resolving claims through litigation and settlements to estimate claims in the subsequent bankruptcies. See, e.g., Specialty Products, slip op. at 3; Eagle-Picher, 189 B.R. at 691 ("Valuation of claims should be based upon settlement values for claims close to the filing date of the bankruptcy case . . . ."). Nevertheless, no court has held that analysis of the

debtor's claims resolution history is the exclusive means to estimate liability. In fact, courts in prior cases have analyzed the merits of claims at estimation. See Grace, 355 B.R. at 493–94; USG, 290 B.R. at 227 (allowing a merits-based challenge to claims during estimation). Other courts have concluded that "a bankruptcy court has discretion to determine the appropriate method of estimation in light of the particular circumstances of the bankruptcy case before it." G-I II, 2006 WL 2403531, at *2 (citing In re Trident Shipworks, Inc., 247 B.R. 513, 514 (Bankr. M.D.Fla. 2000)); In re Thomson McKinnon Sec., Inc., 143 B.R. 612, 619 (Bankr. S.D.N.Y. 1992)); see also Federal-Mogul, 330 B.R. at 155 ("Congress intended the [estimation] procedure to be undertaken initially by the bankruptcy judges, 'using whatever method is best suited to the particular contingencies at issue' " (quoting Bittner v. Borne Chemical Co., 691 F.2d 134, 135 (3d Cir. 1982))). Again, however, the court does not wish to stretch this conclusion beyond its support in the prior opinions and admits that several courts have decided that the claims resolution approach is best suited to asbestos estimation. See, e.g., Specialty Products, slip op. at 1 ("In estimation proceedings the Court is to determine [the debtors' liability for present and future asbestos claims] based on the Debtors' tort system claiming history."); Federal-Mogul, 330 B.R. at 155 (stating that the

estimation focused on "historical claims-handling practices" rather than "discovery of individual claims" because "[t]o do otherwise would eviscerate the purposes of the estimation process and place additional financial burdens on the very trust which the Court [was] trying to create"); Eagle-Picher, 189 B.R. at 686 (deciding that the answer to the question of whether to use the closed pre-petition claims to value the open pre-petition claims was "inescapably in the affirmative").

ESTIMATION OF PRESENT AND FUTURE MESOTHELIOMA CLAIMS

89. The purpose of the present hearing is to determine a reasonable and reliable estimate of Garlock's liability for present and future mesothelioma claims. The parties have presented two wholly different approaches to accomplishing that.

90. The ACC and FCR offered a "settlement" approach to estimation by way of statistical extrapolation from Garlock's history of resolution of mesothelioma claims. Fundamental to this approach is an appraisal of what would have been a fair resolution of claims in the absence of bankruptcy. Owens Corning, 322 B.R. at 722; Federal-Mogul, 330 B.R. at 158. The focus of this approach is on Garlock's "historical claims-handling practices and expert testimony on trends and developments in the asbestos tort system." Federal-Mogul, 330 B.R. at 155-56. This methodology has been used by a number of courts in estimation of asbestos liability: In re Armstrong

World Indus., Inc., 348 B.R. 111 (D. Del. 2006); Owens Corning v. Credit Suisse Boston, 322 B.R. 719 (D. Del. 2005); In re Federal-Mogul, 330 B.R. 133 (D. Del. 2005); In re Eagle-Picher Indus., Inc., 189 B.R. 681 (Bankr. S.D. Ohio 1995). In each of these cases, however, the estimation was not contested by the debtor. Rather, the debtor and claimants had agreed on the estimate, and it was being challenged by other creditors.

91. Garlock offered instead a "legal liability" approach to estimation that focused on the merits of claims. It forecast an estimation calculated by projecting the number of claimants based upon occupation groups and predicting the likelihood of recovery for separate groups to reach an aggregate damage amount, and then reducing that by other sources of recovery. Cases supporting a merits-based approach include: In re W. R. Grace & Co., 355 B.R. 462 (Bankr. D. Del. 2006); In re G-I Holdings, 323 B.R. 583 (Bankr. D.N.J. 2005); In re USG Corp., 290 B.R. 223 (D. Del. 2003).

92. There is a clear comfort in relying on a defendant's own history of valuing claims in the tort system, but a divorce from that process is required in this case. The court has concluded that it cannot adopt the settlement approach of the ACC and FCR for two primary reasons: First, the settlement history data does not accurately reflect fair settlements because exposure evidence was withheld. While that practice was

not uniform, it was widespread and significant enough to infect fatally the settlement process and historic data. It has rendered that data useless for fairly estimating Garlock's liability to present and future claimants.

93. Second, Garlock's settlement data represents insignificant part cost avoidance rather than its liability. The bankruptcy estimation process requires a pure (or more academic) analysis of Garlock's "liability" to claimants; whereas the tort system produced a settlement based both liability and avoidable defense costs. Here, the court's mission is to determine Garlock's *liability* to claimants — and data that includes avoided defense costs does not prove that. By analogy, following the "settlement" approach would be like valuing a trade creditor's claim by the cost of collection rather than the amount of the debt. Here claimants' claims must be estimated as of Garlock's petition date and pursuant to state law. But, the proper measure is of its liability and not simply its claims resolution history. The claims resolution history may be an appropriate measure only if it reliably reflects the debtor's liability, and here it does not.

94. Both the ACC's and the FCR's experts based their estimations solely on Garlock's historical settlement data. That data does not reliably reflect Garlock's true liability. That fundamental error renders their estimates fatally flawed

and of no value to this proceeding. The ACC and FCR experts had Garlock's Analytical Database of fresh data available to them, but did not use it in any way for their estimates. Garlock has raised a number of criticisms of the estimations by the ACC and FCR, but it is not necessary to consider them because of the fundamental unreliability of the underlying data used in their estimates.

95. The court has concluded that the approach offered by Garlock produces a reasonable and reliable estimate of its liability to present and future claimants. That estimate is based on econometric analysis of current data produced in discovery by the representatives of a sizeable sample of the current claimants and applied parameters based on observation and accepted measures. Although it is a "projection," it appears to be based on reasonable factors and to be designed to produce an accurate estimate.

96. Garlock's estimate was derived in large part from its Analytical Database. That database was constructed primarily from questionnaires ("PIQ's") and two supplemental questionnaires sent to the current claimants' law firms.

97. The responses were far from complete, but as the ACC described, the response was "robust." This was a sizeable discovery request (or social science survey) and produced a wealth of data. The data included: job histories, asbestos

exposure information relating to Garlock's and third-parties' products, claims and recoveries made in the tort system and claims made to Trusts. It was supplemented with data from certain Trusts and from some bankruptcy cases. The result was the most extensive database about asbestos claims and claimants that has been produced to date. It is the most current data available and is the only data that accurately reflects the pool of claims against Garlock. It represents a reasonable and representative sample of claims against Garlock.

98. Using in large part Garlock's Analytical Database its expert, Dr. Charles Bates, calculated his estimate of its liability based on a number of factors: the compensatory award on average claimant might receive from all defendants; Garlock's potential share of such an award; the likelihood of the claimant's recovery; the number of present and future claimants who claim exposure to Garlock products; and the discount rate.

99. The total compensatory awards were calculated based upon over 1,000 publicly reported mesothelioma verdicts. Adjustment was made by regression analysis to account for known selection bias based on three variables: jurisdiction, claimant's age and claimant's life status. Adjustment was necessary because the largest verdicts tended to result for younger, living plaintiffs in certain favorable jurisdictions.

These are reasonable adjustments that were necessary to conform the observed verdicts to a representative sample.

100. Garlock's potential share of awards was calculated based largely on exposure information provided in the PIQs and recovery information provided in a Supplemental Settlement Payment Questionnaire. Because of the variety of liability regimes in different states, separate calculations were made for joint-and-several, several and hybrid jurisdictions.

101. The number of responsible parties was estimated from exposures identifying a sample of 1300 pending and resolved claimants. This large sample was demonstrated to be representative of the pool of claimants involved here. Dr. Bates determined that the typical claimant alleges exposure to products of 36 parties: 13 tort defendants (plus Garlock) and 22 Trusts. This number was derived from the actual claims against Garlock. Four of the 22 Trust "claims" were derived from ballots cast in pending bankruptcies, but it is a fair inference that a claimant who casts a ballot to vote on a reorganization Plan will ultimately make a claim against the Trust that results from that Plan.

102. The amount of total recoveries was based on 850 questionnaire responses. This sample was tested and demonstrated to be representative. The total recovery by a typical claimant was estimated to be between $1 and $1.5

million, including an average of $560,000 in tort recoveries and about $600,000 from 22 Trusts.

103. Garlock's share of that total was calculated as follows for differing jurisdictions: for several liability jurisdictions, the total was divided by 36; for joint-and-several jurisdictions, the Trust recoveries were deducted; and for hybrid jurisdictions, a combination of both was made. This factor was based on an assessment of over 1,000 claim files and fairly represents the distribution of claims among the varied state liability regimes.

104. The likelihood of a plaintiff's success was taken directly from Garlock's mesothelioma verdict history during the decade of the 1990s. That rate was 8%. Further, Dr. Bates tested the validity of that benchmark and found it reliable. Because of the withholding of evidence noted above, the period after 2000 would not be a fair or representative period. Garlock's verdict experience during the period prior to that is a fair measure, and, being empirical data, yields the appropriate rate.

105. The number of pending claims against Garlock was based on the PIQ responses that indicated exposure to a Garlock asbestos product. This number was less than putative "claimants" here because that number represents people who named Garlock in a tort system complaint (as one of 30–100

defendants). The number used by Dr. Bates includes only those who asserted exposure to a Garlock product in the PIQ's submitted in this case. Such exposure is a requirement to recovery, so it is appropriate to value at zero the claims of those "claimants" who asserted no exposure to Garlock products. The PIQ responses and the Garlock Analytical database are the freshest and most reliable data available, and the appropriate data for this calculation. In this instance, the historic claiming data is stale and not accurate.

106. Dr. Bates calculated the amount that actual pending claimants could expect to recover from Garlock to be less than $25 million. The court finds $25 million to be a reasonable and reliable estimate of Garlock's aggregate liability to pending claimants.

107. Dr. Bates estimated the future claims based upon the Bates White model predicting the future incidence of mesothelioma and the estimate of the portion of that number who could have been exposed to Garlock products based upon five "contact groups" developed by another Garlock witness, Mr. Henshaw.

108. The Bates White incidence model is an updated version of the Nicholson model (and the Nicholson KPMG model) which has been shown to be highly accurate. The Bates White model was demonstrated to be an acceptable method of predicting future

incidence of mesothelioma that is as likely to be as accurate as the Nicholson model. In fact, the Bates White model is more inclusive than other models because it includes both occupational and non-occupational exposure.

109. John Henshaw is a certified industrial hygienist and former U.S. Assistant Secretary of Labor for OSHA. He reviewed the PIQs and other evidence in order to evaluate the extent to which claimants who worked in various job categories were exposed to asbestos from gaskets. Based on that research, he assigned various job categories into separate "exposure groups" with similar likelihood of exposures to asbestos from gaskets. These groupings were based on empirical evidence from claimants and appear to be a valid and reliable assessment of probable exposure.

110. Since Garlock was simply one of a number of gasket producers, Dr. Bates further estimated the portion of possible future claimants who were exposed to Garlock products using percentages from the PIQs.

111. After applying these factors and valuing the claims in the manner described previously, Dr. Bates discounted his estimate to present value using the Congressional Budget Office's long-term inflation and risk free rates. That is an appropriate and acceptable discount rate in these circumstances.

112. Dr. Bates determined that Garlock's future claimants could expect to recover a net present value of less than $100 million. The court finds that $100 million is a reasonable and reliable estimate of Garlock's liability to future mesothelioma claimants.

113. For all of the reasons stated herein, the court has concluded that Garlock's aggregate liability for present and future mesothelioma claims totals $125 million.

It is therefore ORDERED that the estimate of the debtors' aggregate liability for present and future mesothelioma claims is $125 million.

This Order has been signed electronically.
The Judge's signature and Court's seal
appear at the top of the Order.

United States Bankruptcy Court